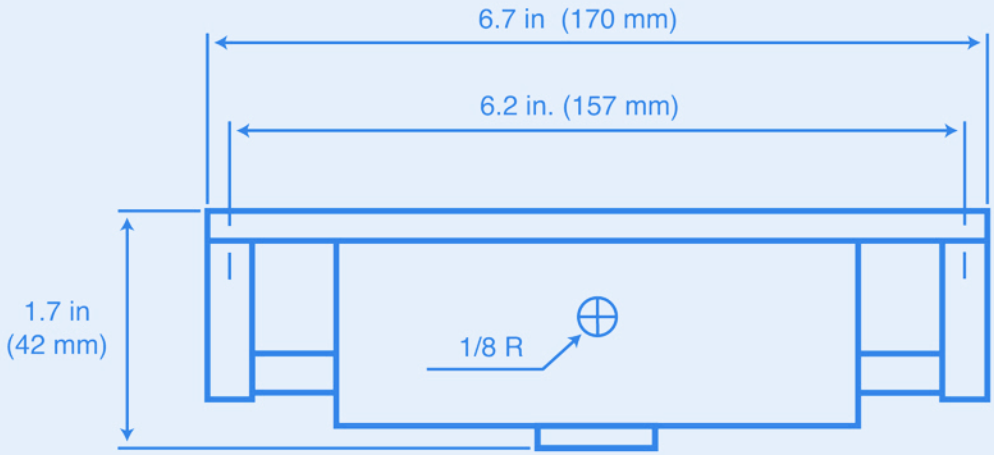
6.7 in (170 mm)
6.2 in. (157 mm)
1.7 in
(42 mm)
1/8 R

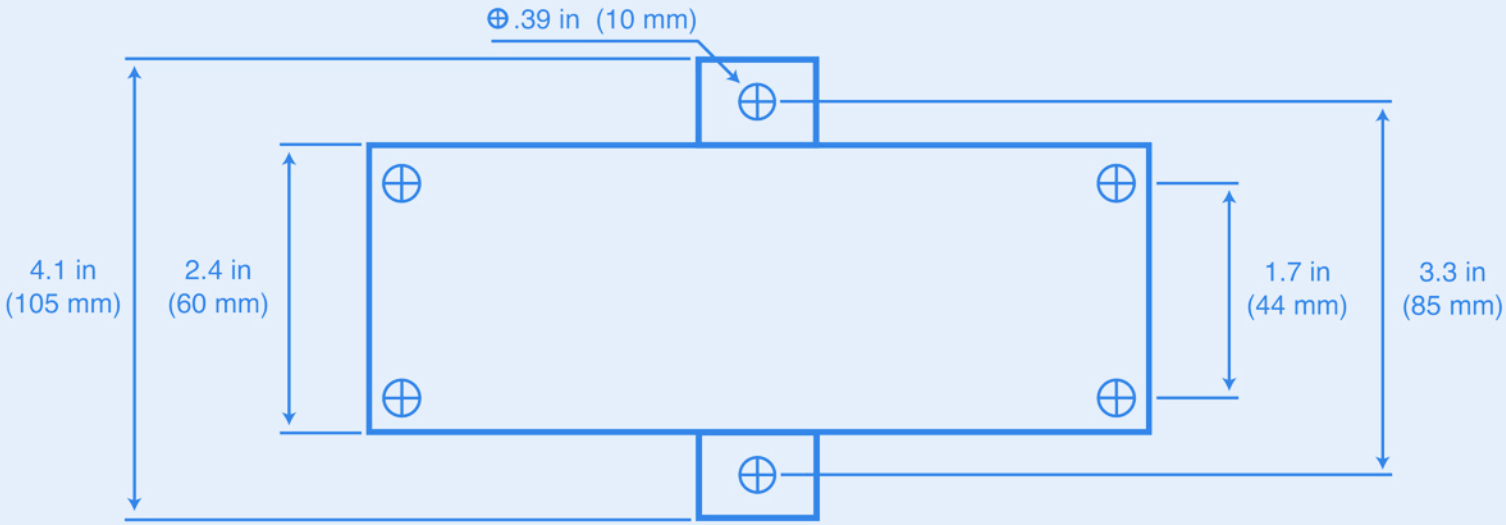
⊕ .39 in (10 mm)
4.1 in
(105 mm)
2.4 in
(60 mm)
1.7 in
(44 mm)
3.3 in
(85 mm)